REVISION HISTORY				
REV	DESCRIPTION	DATE	BY	ECN
1	FIRST ISSUE	11-11-23	MH	----

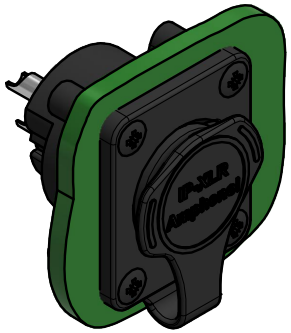

CAPPED VIEW

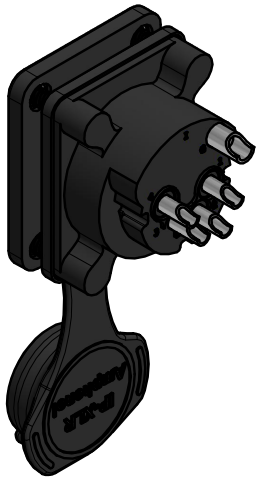

REAR VIEW

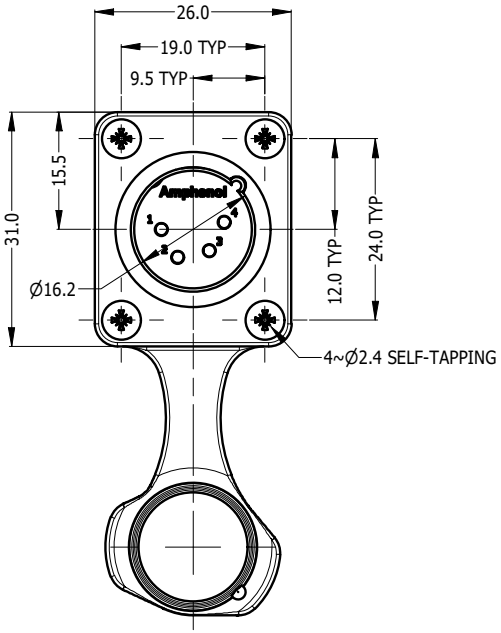

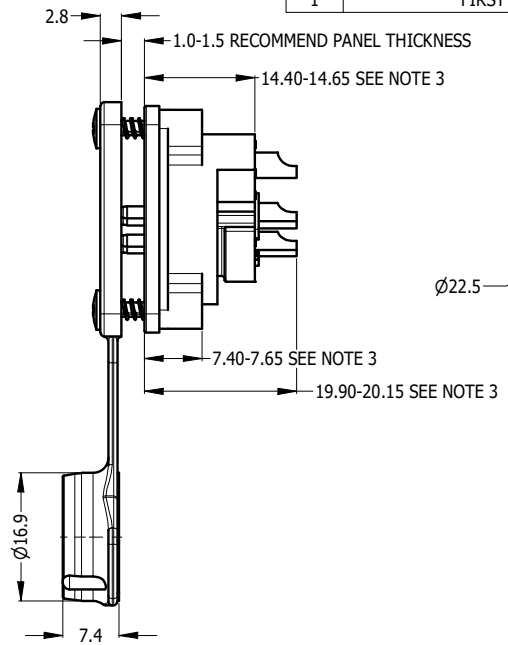

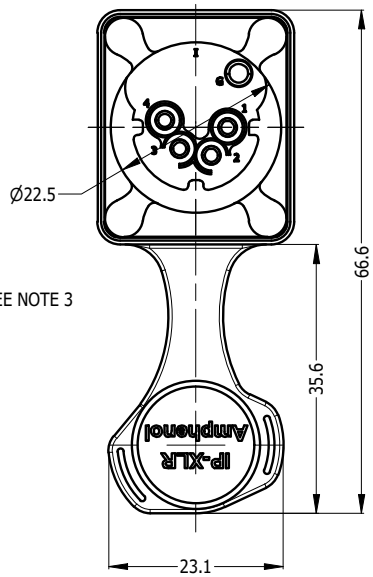

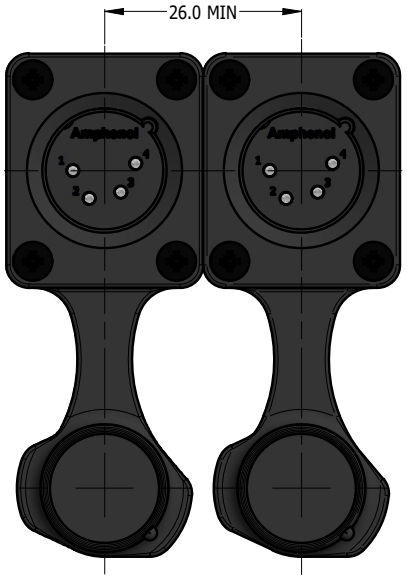

RECOMMEND MINIMUM MOUNTING PITCH

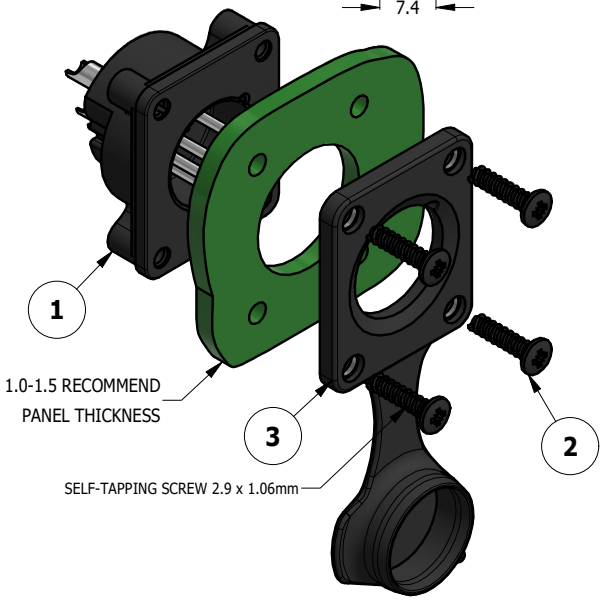

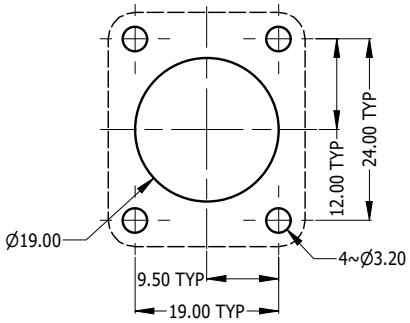

RECOMMEND PANEL CUT OUT

PART NUMBER	CONTACT FINISH
AXS4MP2	TIN PLATED
AXS4MP2-AU	GOLD PLATED

NOTE:
1. MATING CONNECTOR SHELL TO HAVE MIN 1.6 SURFACE FINISH TO ACHIEVE IP RATING OF THIS CONNECTOR.
2. BLACK MOUNTING SCREW 52500011-430 x 4 PCS TO BE SUPPLIED WITH THE CONNECTOR, MAX TORQUE 0.5Nm.
3. DUE TO 0.4mm THICK RUBBER SEAL, THE DIM WILL VARY DEPENDING ON THE SCREWS TIGHTENING IN ASSEMBLY.

ITEM	PART NUMBER	DESCRIPTION	QTY
3	52730035-000	AXS FRONT FLANGE D TYPE RUBBER SEAL IP54 WITH CAP	1
2	52500011-430	SCREW 2.9 x 1.06mm USED FOR PLASTIC MATERIAL	4
1	55011499-024/924	AXS4MP2 WITHOUT RUBBER FLANGE - TIN/GOLD PLATED CONTACT	1

UNLESS OTHERWISE SPECIFIED TOLERANCE TO BE

LINEAR	ANGULAR
X ± 0.5	X' ± 1
X.X ± 0.2	X.X' ± 30'
X.XX ± 0.1	X.X'X " ± 15'

BREAK ALL SHARP EDGES AND REMOVE ALL BURRS

DO NOT SCALE

DIMENSIONS IN MILIMETRES

THIRD ANGLE PROJECTION

THIS DOCUMENT IS THE PROPERTY OF AMPHENOL AUSTRALIA PTY. LTD. . NO PART THEREOF MAY BE REPRODUCED AND USED WITHOUT THE PRIOR WRITTEN CONSENT OF THE OWNER

MATERIAL: **SEE COMPONENT**

FINISH: **SEE COMPONENT**

DRN:	M.H	DATE: 11-11-23
CKD:	M.H	DATE: 11-11-23
APP'D:	P.M	DATE: 11-11-23
SCALE:	**1:1**	SIZE: **A4**

Amphenol
Amphenol Australia Pty.Ltd,
22 Industry Blvd, Carrum Downs, VIC 3201

TITLE: **AXS4MP2**
AXS PANEL MOUNT SERIES
CUSTOMER DRAWING

CAD FILE: 55011499824110

PART No. **SEE TABLE**

DRAWING No. **55011499-824-2**

SHEET **2/2**